AMPL "Hands-On" Session

Robert Fourer

Department of Industrial Engineering & Management Sciences
Northwestern University

Institute for Mathematics and Its Applications

Annual Program: Optimization

Supply Chain and Logistics Optimization Tutorial

September 9-13, 2002

The McDonald's Diet Problem

Foods:

QP	*Quarter Pounder*
FR	*Fries, small*
MD	*McLean Deluxe*
SM	*Sausage McMuffin*
BM	*Big Mac*
1M	*1% Lowfat Milk*
FF	*Filet-O-Fish*
OJ	*Orange Juice*
MC	*McGrilled Chicken*

Nutrients:

Prot	*Protein*
Iron	*Iron*
VitA	*Vitamin A*
Cals	*Calories*
VitC	*Vitamin C*
Carb	*Carbohydrates*
Calc	*Calcium*

McDonald's Diet Problem Data

	QP	MD	BM	FF	MC	FR	SM	1M	OJ	
Cost	**1.8**	**2.2**	**1.8**	**1.4**	**2.3**	**0.8**	**1.3**	**0.6**	**0.7**	**Need:**
Protein	28	24	25	14	31	3	15	9	1	**55**
Vitamin A	15	15	6	2	8	0	4	10	2	**100**
Vitamin C	6	10	2	0	15	15	0	4	120	**100**
Calcium	30	20	25	15	15	0	20	30	2	**100**
Iron	20	20	20	10	8	2	15	0	2	**100**
Calories	510	370	500	370	400	220	345	110	80	**2000**
Carbo	34	35	42	38	42	26	27	12	20	**350**

Formulation: Too General

$$\begin{aligned} &\textit{Minimize} && cx \\ &\textit{Subject to} && Ax = b \\ & && x = 0 \end{aligned}$$

Formulation: Too Specific

Minimize	$1.84\ x_{QP}$	$+\ 2.19\ x_{MD}$	$+\ 1.84\ x_{BM}$	$+\ 1.44\ x_{FF}$	$+\ 2.29\ x_{MC}$	$+\ 0.77\ x_{FR}$	$+\ 1.29\ x_{SM}$	$+\ 0.60\ x_{1M}$	$+\ 0.72\ x_{OJ}$	
Subject to	$28\ x_{QP}$	$+\ 24\ x_{MD}$	$+\ 25\ x_{BM}$	$+\ 14\ x_{FF}$	$+\ 31\ x_{MC}$	$+\ 3\ x_{FR}$	$+\ 15\ x_{SM}$	$+\ 9\ x_{1M}$	$+\ 1\ x_{OJ}$	$= 55$
	$15\ x_{QP}$	$+\ 15\ x_{MD}$	$+\ 6\ x_{BM}$	$+\ 2\ x_{FF}$	$+\ 8\ x_{MC}$	$+\ 0\ x_{FR}$	$+\ 4\ x_{SM}$	$+\ 10\ x_{1M}$	$+\ 2\ x_{OJ}$	$= 100$
	$6\ x_{QP}$	$+\ 10\ x_{MD}$	$+\ 2\ x_{BM}$	$+\ 0\ x_{FF}$	$+\ 15\ x_{MC}$	$+\ 15\ x_{FR}$	$+\ 0\ x_{SM}$	$+\ 4\ x_{1M}$	$+\ 120\ x_{OJ}$	$= 100$
	$30\ x_{QP}$	$+\ 20\ x_{MD}$	$+\ 25\ x_{BM}$	$+\ 15\ x_{FF}$	$+\ 15\ x_{MC}$	$+\ 0\ x_{FR}$	$+\ 20\ x_{SM}$	$+\ 30\ x_{1M}$	$+\ 2\ x_{OJ}$	$= 100$
	$20\ x_{QP}$	$+\ 20\ x_{MD}$	$+\ 20\ x_{BM}$	$+\ 10\ x_{FF}$	$+\ 8\ x_{MC}$	$+\ 2\ x_{FR}$	$+\ 15\ x_{SM}$	$+\ 0\ x_{1M}$	$+\ 2\ x_{OJ}$	$= 100$
	$510\ x_{QP}$	$+\ 370\ x_{MD}$	$+\ 500\ x_{BM}$	$+\ 370\ x_{FF}$	$+\ 400\ x_{MC}$	$+\ 220\ x_{FR}$	$+\ 345\ x_{SM}$	$+\ 110\ x_{1M}$	$+\ 80\ x_{OJ}$	$= 2000$
	$34\ x_{QP}$	$+\ 35\ x_{MD}$	$+\ 42\ x_{BM}$	$+\ 38\ x_{FF}$	$+\ 42\ x_{MC}$	$+\ 26\ x_{FR}$	$+\ 27\ x_{SM}$	$+\ 12\ x_{1M}$	$+\ 20\ x_{OJ}$	$= 350$

Algebraic Model

Given F, a set of foods
N, a set of nutrients

and $a_{ij} = 0$, the units of nutrient i in one serving of food j,
for each $i \in N$ and $j \in F$

$b_i > 0$, the units of nutrient i required, for each $i \in N$

$c_j > 0$, the cost per serving of food j, for each $j \in F$

Define $x_j = 0$, the number of servings of food j to be purchased, for each $j \in F$

Minimize $\Sigma_{j \in F} \; c_j \, x_j$

Subject to $\Sigma_{j \in F} \; a_{ij} \, x_j \; = \; b_i$, for each $i \in N$

Algebraic Model in AMPL

```
set NUTR;   # nutrients
set FOOD;   # foods

param amt {NUTR,FOOD} >= 0;   # amount of nutrient in each food
param nutrLow {NUTR} >= 0;    # lower bound on nutrients in diet
param cost {FOOD} >= 0;       # cost of foods

var Buy {FOOD} >= 0 integer;  # amounts of foods to be purchased

minimize TotalCost: sum {j in FOOD} cost[j] * Buy[j];

subject to Need {i in NUTR}:
   sum {j in FOOD} amt[i,j] * Buy[j] >= nutrLow[i];
```

Data for the AMPL Model

```
param: FOOD:            cost :=
  "Quarter Pounder"    1.84     "Fries, small"        .77
  "McLean Deluxe"      2.19     "Sausage McMuffin"   1.29
  "Big Mac"            1.84     "1% Lowfat Milk"      .60
  "Filet-O-Fish"       1.44     "Orange Juice"        .72
  "McGrilled Chicken"  2.29 ;

param: NUTR: nutrLow :=
   Prot  55   VitA 100   VitC  100
   Calc 100   Iron 100   Cals 2000   Carb 350 ;

param amt (tr):         Cals  Carb  Prot  VitA  VitC  Calc  Iron
   :=
   "Quarter Pounder"     510    34    28    15     6    30    20
   "McLean Deluxe"       370    35    24    15    10    20    20
   "Big Mac"             500    42    25     6     2    25    20
   "Filet-O-Fish"        370    38    14     2     0    15    10
   "McGrilled Chicken"   400    42    31     8    15    15     8
   "Fries, small"        220    26     3     0    15     0     2
   "Sausage McMuffin"    345    27    15     4     0    20    15
   "1% Lowfat Milk"      110    12     9    10     4    30     0
   "Orange Juice"         80    20     1     2   120     2     2 ;
```

Continuous-Variable Solution

```
ampl: model mcdiet1.mod;
ampl: data mcdiet1.dat;

ampl: solve;

MINOS 5.5: ignoring integrality of 9 variables
MINOS 5.5: optimal solution found.
7 iterations, objective 14.8557377

ampl: display Buy;

Buy [*] :=
    1% Lowfat Milk   3.42213
           Big Mac   0
       Filet-O-Fish  0
      Fries, small   6.14754
 McGrilled Chicken   0
     McLean Deluxe   0
      Orange Juice   0
   Quarter Pounder   4.38525
  Sausage McMuffin   0
```

Integer-Variable Solution

```
ampl: option solver cplex;

ampl: solve;

CPLEX 7.0.0: optimal integer solution; objective 15.05
41 MIP simplex iterations
23 branch-and-bound nodes

   ampl: display Buy;

   Buy [*] :=
       1% Lowfat Milk   4
              Big Mac   0
         Filet-O-Fish  1
        Fries, small   5
    McGrilled Chicken   0
        McLean Deluxe   0
        Orange Juice   0
      Quarter Pounder   4
     Sausage McMuffin   0
```

Same for 63 Foods, 12 Nutrients

```
ampl: reset data;
ampl: data mcdiet2.dat;

ampl: option solver minos;

ampl: solve;

MINOS 5.5: ignoring integrality of 63 variables
MINOS 5.5: optimal solution found.

16 iterations, objective -1.786806582e-14

ampl: option omit_zero_rows 1;

ampl: display Buy;

Buy [*] :=
                 Bacon Bits   55
              Barbeque Sauce   50
           Hot Mustard Sauce   50
```

Essential Modeling Language Features

Sets and indexing

Simple sets

Compound sets

Computed sets

Objectives and constraints

Linear, piecewise-linear

Nonlinear

Integer, network

. . . and many more features

Express problems the various way that people do

Support varied solvers

Features

Sets and Indexing

Simple sets

Sets of objects

Sets of numbers

Ordered sets

Compound sets

Sets of pairs

Sets of n-tuples

Indexed collections of sets

Computing sets

By enumerating set members

By operating on sets: union, intersection, . . .

Sets of Objects

Transportation

```
set ORIG;   # origins
set DEST;   # destinations

param supply {ORIG} >= 0;   # at origins
param demand {DEST} >= 0;   # at destinations

   check: sum {i in ORIG} supply[i] = sum {j in DEST} demand[j];

param cost {ORIG,DEST} >= 0;  # ship cost/unit
var Trans {ORIG,DEST} >= 0;   # units shipped

minimize total_cost:
   sum {i in ORIG, j in DEST} cost[i,j] * Trans[i,j];

subject to Supply {i in ORIG}:
   sum {j in DEST} Trans[i,j] = supply[i];

subject to Demand {j in DEST}:
   sum {i in ORIG} Trans[i,j] = demand[j];
```

Sets of Numbers

Multi-period production

```
set PROD;      # products
param T > 0;   # number of weeks

param rate {PROD} > 0;
param inv0 {PROD} >= 0;
param avail {1..T} >= 0;
param market {PROD,1..T} >= 0;

param prodcost {PROD} >= 0;
param invcost {PROD} >= 0;
param revenue {PROD,1..T} >= 0;

var Make {PROD,1..T} >= 0;
var Inv {PROD,0..T} >= 0;
var Sell {p in PROD, t in 1..T} >= 0, <= market[p,t];

maximize Total_Profit:
   sum {p in PROD, t in 1..T}
     (revenue[p,t] * Sell[p,t]
        - prodcost[p] * Make[p,t] - invcost[p] * Inv[p,t]);

subj to Time {t in 1..T}:
   sum {p in PROD} (1/rate[p]) * Make[p,t] <= avail[t];

subj to Initial {p in PROD}: Inv[p,0] = inv0[p];

subj to Balance {p in PROD, t in 1..T}:
   Make[p,t] + Inv[p,t-1] = Sell[p,t] + Inv[p,t];
```

Sets & Indexing

Subsets

Diet

```
set FOOD;  # foods
param cost {FOOD} > 0;
param f_min {FOOD} >= 0;
param f_max {j in FOOD} >= f_min[j];

set NUTR;  # nutrients
set MINREQ within NUTR;  # nutrients with minimum requirements
set MAXREQ within NUTR;  # nutrients with maximum requirements
param n_min {MINREQ} >= 0;
param n_max {MAXREQ} >= 0;

param amt {NUTR,FOOD} >= 0;

var Buy {j in FOOD} >= f_min[j], <= f_max[j];

minimize Total_Cost:  sum {j in FOOD} cost[j] * Buy[j];

subject to Diet_Min {i in MINREQ}:
   sum {j in FOOD} amt[i,j] * Buy[j] >= n_min[i];
subject to Diet_Max {i in MAXREQ}:
   sum {j in FOOD} amt[i,j] * Buy[j] <= n_max[i];
```

Ordered Sets

Multi-period production

```
set PROD;
set WEEKS ordered;

param rate {PROD} > 0;
param inv0 {PROD} >= 0;
param avail {WEEKS} >= 0;
param market {PROD,WEEKS} >= 0;
. . . . .

var Make {PROD,WEEKS} >= 0;
var Inv {PROD,WEEKS} >= 0;
var Sell {p in PROD, t in WEEKS} >= 0, <= market[p,t];
. . . . .

subj to balance {p in PROD, t in WEEKS}:
   Make[p,t] + (if t = first(WEEKS) then inv0[p] else Inv[p,prev(t)])
      = Sell[p,t] + Inv[p,t];
```

```
set PROD := bands coils ;

set WEEKS := 27sep93 04oct93 11oct93 18oct93 ; . . . . .
```

. . . also options to declare induced orderings

Sets of Pairs

Transportation

```
set ORIG;   # origins
set DEST;   # destinations

set LINKS within {ORIG,DEST};

param supply {ORIG} >= 0;
param demand {DEST} >= 0;

param cost {LINKS} >= 0;
var Trans {LINKS} >= 0;

minimize total_cost:
  sum {(i,j) in LINKS} cost[i,j] * Trans[i,j];

subject to Supply {i in ORIG}:
  sum {(i,j) in LINKS} Trans[i,j] = supply[i];

subject to Demand {j in DEST}:
  sum {(i,j) in LINKS} Trans[i,j] = demand[j];
```

Sets of Pairs: Data

```
param: ORIG: supply :=
    GARY 1400  CLEV 2600  PITT 2900 ;

param: DEST:  demand :=
    FRA  900   DET 1200   LAN  600   WIN  400
    STL 1700   FRE 1100   LAF 1000 ;

param: LINKS:  cost :=
    GARY DET 14  GARY LAN 11  GARY STL 16
    GARY LAF  8  CLEV FRA 27  CLEV DET  9
    CLEV LAN 12  CLEV WIN  9  CLEV STL 26
    CLEV LAF 17  PITT FRA 24  PITT WIN 13
    PITT STL 28  PITT FRE 99 ;
```

```
ampl: display {i in ORIG}: {(i,j) in LINKS};

set {(°GARY°,j) in LINKS} := DET LAN STL LAF;
set {(°CLEV°,j) in LINKS} := FRA DET LAN WIN STL LAF;
set {(°PITT°,j) in LINKS} := FRA WIN STL FRE;

ampl: display cost;

:    DET  FRA  FRE  LAF  LAN  STL  WIN :=
CLEV   9   27    .   17   12   26    9
GARY  14    .    .    8   11   16    .
PITT   .   24   99    .    .   28   13 ;
```

Sets of *n*-tuples

Airline Fleet Assignment

```
set FLEETS;
set CITIES;

set TIMES circular;

set LEGS within
   {c1 in CITIES, c2 in CITIES,
    t1 in TIMES,  t2 in TIMES: c1 <> c2 and t1 <> t2};

set HOOKS within
   {(c1,c2,t1,t2) in LEGS,
    (c3,c4,t3,t4) in LEGS: c2 = c3};

param cost {FLEETS,LEGS} >= 0;

set FL_LEGS :=

   {f in FLEETS, (c1,c2,t1,t2) in LEGS: cost[f,c1,c2,t1,t2] < BIG};
```

Indexed Collections of Sets

Multicommodity Transportation

```
set ORIG;   # origins
set DEST;   # destinations
set PROD;   # products

set orig {PROD} within ORIG;
set dest {PROD} within DEST;
set links {p in PROD} := orig[p] cross dest[p];

param supply {p in PROD, orig[p]} >= 0;
param demand {p in PROD, dest[p]} >= 0;

param limit {ORIG,DEST} >= 0;

param cost {p in PROD, links[p]} >= 0;
var Trans {p in PROD, links[p]} >= 0;

minimize total_cost:
  sum {p in PROD, (i,j) in links[p]} cost[p,i,j] * Trans[p,i,j];

subj to Supply {p in PROD, i in orig[p]}:
  sum {j in dest[p]} Trans[p,i,j] = supply[p,i];

subj to Demand {p in PROD, j in dest[p]}:
  sum {i in orig[p]} Trans[p,i,j] = demand[p,j];

subj to Multi {i in ORIG, j in DEST}:
  sum {p in PROD: (i,j) in links[p]} Trans[p,i,j] <= limit[i,j];
```

Sets & Indexing

Computed Sets

Airline Fleet Assignment

```
set SERV_CITIES {f in FLEETS} :=
   union {(c1,c2,t1,t2) in LEGS} {c1,c2};
         # for each fleet, the set of
         # cities that it serves

set OP_TIMES {f in FLEETS, c in SERV_CITIES[f]} circular by TIMES :=
   setof {(c,c2,t1,t2) in LEGS} t1 union
   setof {(c1,c,t1,t2) in LEGS} next(t2,TIMES,turn[f,c]);
         # for each fleet and city served by that fleet,
         # the set of active arrival & departure times at that city,
         # with arrival time adjusted for the turn requirement
```

. . . also enumerate set members: **`setof`, `{ ... }`**

. . . operate on sets: **`union`, `int`, `diff`, `symdiff`**

Features

Objectives and Constraints

(Linear)

Nonlinear

Integer

Network

Objectives & Constraints

Nonlinear

Established features

Nonlinear expressions in the variables

Derivatives supplied to algorithms

Fast “automatic differentiation”

Refinements

Nondifferentiable expressions

Substitution of lengthy or common subexpressions

User-supplied functions

Detection of partially separable structure

2nd derivatives

Nonlinear Objective

Traffic Flow

```
set ORIG;    # origins
set DEST;    # destinations

param supply {ORIG} >= 0;    # amounts available at origins
param demand {DEST} >= 0;    # amounts required at destinations

   check: sum {i in ORIG} supply[i] = sum {j in DEST} demand[j]

param rate {ORIG,DEST} >= 0;    # base shipment costs per unit
param limit {ORIG,DEST} > 0;    # limit on units shipped

var Trans {i in ORIG, j in DEST}
   >= 1e-10, <= .9999 * limit[i,j], := limit[i,j]/2;
                                   # actual units to be shipped

minimize Total_Cost:
   sum {i in ORIG, j in DEST}
      rate[i,j] * Trans[i,j]^0.8 / (1 - Trans[i,j]/limit[i,j]);

subject to Supply {i in ORIG}:
   sum {j in DEST} Trans[i,j] = supply[i];
subject to Demand {j in DEST}:
   sum {i in ORIG} Trans[i,j] = demand[j];
```

Nonlinear Constraints

Largest "Small" Polygon

```
param N integer > 0;
param pi := 4*atan(1.);

var rho {i in 1..N} <= 1, >= 0, := 4*i*(N+1-i) / (N+1)**2;
          # polar radius (distance to fixed vertex)
var the {i in 1..N} >= 0, := pi*i/N;
          # polar angle (measured from fixed direction)

maximize area:
   0.5 * sum{i in 2..N} rho[i] * rho[i-1] * sin(the[i]-the[i-1]);

subject to cd {i in 1..N, j in i+1 .. N}:
   rho[i]**2 + rho[j]**2 - 2*rho[i]*rho[j]*cos(the[j]-the[i]) <= 1;

subject to ac {i in 2..N}: the[i] >= the[i-1];
subject to fix_theta: the[N] = pi;
subject to fix_rho: rho[N] = 0;
```

Nonlinear Solvers

```
ampl: model nltranse.mod
ampl: data nltrans.dat;

ampl: option solver minos;
ampl: solve;

MINOS 5.5: optimal solution found.
40 iterations, objective 355438.2006
Nonlin evals: obj = 78, grad = 77.

ampl: option reset_initial_guesses 1;

ampl: option solver snopt;
ampl: solve;

SNOPT 6.1-1:
  Primal feasible solution; could not satisfy dual feasibility.
444 iterations, objective 354276.7272
Nonlin evals: obj = 213, grad = 212.

ampl:
```

Nonlinear

Derivative Computations

Nonlinear expressions

Automatic differentiation

Function & gradient interface routines

2nd derivatives

Dense or sparse storage

Detection of separability

Partially separable structure

Group partially separable structure

Use of separability

Faster 2nd derivative computations

Faster optimization methods

Nonlinear

Automatic Differentiation

Computations

Forward sweep: compute $\phi(x)$,
save info on $\partial f(x)/\partial o$ for each operation o

Backward sweep: recur to compute $\nabla f(x)$

Complexity

Small multiple of *time* for $\phi(x)$ alone

Potentially large multiple of *space*

Nonlinear

Nondifferentiable Expressions

Interval of instability

```
if abs(x[j]) > delta
   then log(1+x[j]) / x[j]
   else 1 - x[j]/2
```

Composite

```
head {(i,j) in pipes}:
   H[i,j] = cv^2 * corr[i,j] *
      (if Q[i,j] >= 0 then Q[i,j]^2 else -Q[i,j]^2);
```

. . . appropriate derivatives do get computed

Nonlinear

Lengthy Subexpressions

Definition by constraints

```
var T >= 0;  # temperature
var I >= 0;  # thickness of insulation
var P;   # pressure
var CI;  # insulation cost
var CV;  # vessel cost
var CR;  # recondensation cost

minimize Total_Cost:  CI + CV + CR;

subj to P_def: P = exp(-3950/(T+460)+11.86);
subj to CI_def: CI = 400 * I^0.9;
subj to CV_def: CV = 1000 + 22 * (P-14.7)^1.2;
subj to CR_def: CR = 144 * (80-T) / I;
```

Nonlinear

Lengthy Subexpressions

Definition by declarations

```
var T >= 0;
var I >= 0;

var P = exp(-3950/(T+460)+11.86);
var CI = 400 * I^0.9;
var CV = 1000 + 22 * (P-14.7)^1.2;
var CR = 144 * (80-T) / I;

minimize Total_Cost:  CI + CV + CR;
```

Nonlinear

Common Subexpressions

Definition by constraints

```
equil6: K6*sqrt(n2)*sqrt(n4) = sqrt(n1)*n6*sqrt(p/nT);
equil7: K7*sqrt(n1)*sqrt(n2) = sqrt(n4)*n7*sqrt(p/nT);
equil8: K8*n1 = n4*n8*(p/nT);
equil9: K9*n1*sqrt(n3) = n4*n9*sqrt(p/nT);
equil10: K10*n1^2 = n4^2*n10*(p/nT);
total_defn: nT = n1+n2+n3+n4+n5+n6+n7+n8+n9+n10;
```

. . . substitution can be switched on or off

Definition by declarations

```
var nT = n1+n2+n3+n4+n5+n6+n7+n8+n9+n10;
equil6: K6*sqrt(n2)*sqrt(n4) = sqrt(n1)*n6*sqrt(p/nT);
equil7: ...
```

. . . more flexible and selective

Nonlinear

Substitutions for Subexpressions

without substitution

```
ampl: model ammonia.mod;
ampl: solve;

6 variables:
        3 nonlinear variables
        3 linear variables
4 constraints, all nonlinear; 9 linear nonzeros
1 linear objective; 3 nonzeros.

MINOS 5.5: optimal solution found.
33 iterations, objective 5339.252824
```

with substitution

```
ampl: model ammonia.mod;
ampl: option substout 1;
ampl: solve;

Substitution eliminates 4 variables.

Adjusted problem:
2 variables, all nonlinear
0 constraints
1 nonlinear objective; 2 linear nonzeros.

MINOS 5.5: optimal solution found.
4 iterations, objective 5339.252824
```

Nonlinear

User-Defined Functions

Declaration

Specification of calling protocols:

`function` *name* (*domain-list*) *options* **`;`**

domain-list specifies sets in which arguments must lie

return value may be numeric, symbolic, "random"

Definition

Through user's C program

Refinements

Evaluate where needed

- in model
- while solving

Link dynamically

- DLLs for Windows PCs
- shared libraries for Unix systems

Objectives & Constraints

Integer

Established features

Integer variables

Refinements

Piecewise-linear functions of variables

Network modeling extensions

. . . combinatorial extensions to be mentioned later

Integer Variables

Declare like ordinary variables

```
var Ship >= 0, integer;
var Use integer >= 0, <= 1;
var Use binary;
```

Translation is automatic

Bounds on integer variables rounded

Integer information sent to solver

. . . some logical conditions
(special ordered sets) can be recognized

Integer

Multicommodity Model

```
set ORIG;   # origins
set DEST;   # destinations
set PROD;   # products

param supply {ORIG,PROD} >= 0;
param demand {DEST,PROD} >= 0;
param limit {ORIG,DEST} >= 0;

param minload >= 0;
param maxserve integer > 0;

param vcost {ORIG,DEST,PROD} >= 0;
var Trans {ORIG,DEST,PROD} >= 0;

param fcost {ORIG,DEST} >= 0;
var Use {ORIG,DEST} binary;

minimize Total_Cost:
  sum {i in ORIG, j in DEST, p in PROD} vcost[i,j,p] * Trans[i,j,p] +
  sum {i in ORIG, j in DEST} fcost[i,j] * Use[i,j];
```

Integer

Multicommodity Constraints

```
subj to Supply {i in ORIG, p in PROD}:
  sum {j in DEST} Trans[i,j,p] = supply[i,p];

subj to Max_Serve {i in ORIG}:
  sum {j in DEST} Use[i,j] <= maxserve;

subj to Demand {j in DEST, p in PROD}:
  sum {i in ORIG} Trans[i,j,p] = demand[j,p];

subj to Multi {i in ORIG, j in DEST}:
  sum {p in PROD} Trans[i,j,p] <= limit[i,j] * Use[i,j];

subj to Min_Ship {i in ORIG, j in DEST}:
  sum {p in PROD} Trans[i,j,p] >= minload * Use[i,j];
```

```
set ORIG := GARY CLEV PITT ;
set DEST := FRA DET LAN WIN STL FRE LAF ;
set PROD := bands coils plate ;

param minload := 375 ;
param maxserve := 5 ;

param supply (tr):  GARY   CLEV   PITT :=
            bands    400    700    800
            coils    800   1600   1800
            plate    200    300    300 ;

param demand (tr): .....
```

Integer

Multicommodity Optimization

```
ampl: model multmip3.mod;
ampl: data multmip3.dat;

ampl: option solver cplex;
ampl: option cplex_options °mipdisplay=1°;

ampl: solve;

CPLEX 8.0.0: mipdisplay 1

MIP emphasis: balance optimality and feasibility

Node log . . .
Best integer = 2.371250e+005  Node = 35  Best node = 2.344660e+005
Best integer = 2.356250e+005  Node = 40  Best node = 2.352110e+005

Cover cuts applied:  2
Implied bound cuts applied:  16
Flow cuts applied:  11
Gomory fractional cuts applied: 5

CPLEX 8.0.0: optimal integer solution; objective 235625

547 MIP simplex iterations
41 branch-and-bound nodes
```

Integer

Multicommodity Results

```
ampl: option omit_zero_rows 1;
ampl: display Trans;
Trans [CLEV,*,*]
:   bands coils plate  :=
DET     0   525   100
FRA   275    50    50
FRE     0   450   100
LAN   100   400     0
STL   325   175    50
 [GARY,*,*]
:   bands coils plate  :=
LAF     0   400     0
STL   325   150   150
WIN    75   250    50
 [PITT,*,*]
:   bands coils plate  :=
DET   300   225     0
FRA    25   450    50
FRE   225   400     0
LAF   250   100   250
STL     0   625     0
```

Network

Network flow linear program

Define nodes, arcs, data, variables:

```
set N;                      # nodes
set A within N cross N;     # arcs

param b {N};                # inflow or outflow

param c {A} >= 0;           # flow cost
param u {A} >= 0;           # flow upper bound

var Flow {(i,j) in A} >= 0, <= u[i,j];
```

Flow balance at nodes, *explicit:*

```
subject to Balance {i in N}:
   sum {j in N: (i,j) in A} Flow[i,j] -
   sum {j in N: (j,i) in A} Flow[j,i] = b[i];
```

Flow balance at nodes, *implicit:*

```
subject to Balance {i in N}:
   sum {(i,j) in A} Flow[i,j] -
   sum {(j,i) in A} Flow[j,i] = b[i];
```

. . . why not declare nodes and arcs directly?

Node Declarations

Transshipment

```
node Balance {i in N};
```

Source or sink

```
node Balance {i in N}: net_out = b[i];
```

Various kinds

```
node RT: rt_min <= net_out <= rt_max;
node OT: ot_min <= net_out <= ot_max;

node P_RT {fact};
node P_OT {fact};

node M {prod,fact};
node D {prod,dctr};

node W {p in prod, w in whse}:
   net_in = dem[p,w];
```

Arc Declarations

Pure network

```
arc Flow {(i,j) in A}:
   from Balance[i], to Balance[j],
   >= 0, <= u[i,j], obj total_cost c[i,j];
```

Generalized network

```
arc Manu_RT {p in prd, f in fact: rpc[p,f] <> 0}:
   >= 0,
   from P_RT[f],
   to M[p,f] (dp[f]*hd[f]/pt[p,f]),
   obj cost (rpc[p,f]*dp[f]*hd[f]/pt[p,f]);
```

. . . objective must be previously declared

Multicommodity Flows

Side constraints

```
node Balance {i in N, p in P}: net_out = b[i,p];

arc Flow {(i,j) in A, p in P}:
     from Balance[i,p], to Balance[j,p],
     >= 0, <= u[i,j,p],
     obj total_cost c[i,j,p];

subject to Mult {(i,j) in A}:
     sum {p in P} Flow[i,j,p] <= u_mult[i,j];
```

Side variables

```
var Feed {f in F, i in N} >= 0, <= u_feed[f,i];

node Balance {i in N, p in P}: net_out =
     b[i,p] + sum {f in F} a[p,f] * Feed[f,i];

arc Flow {(i,j) in A, p in P}:
     from Balance[i,p], to Balance[j,p],
     >= 0, <= u[i,j,p], obj total_cost c[i,j,p];
```

Networks

Traveling Salesman Problem

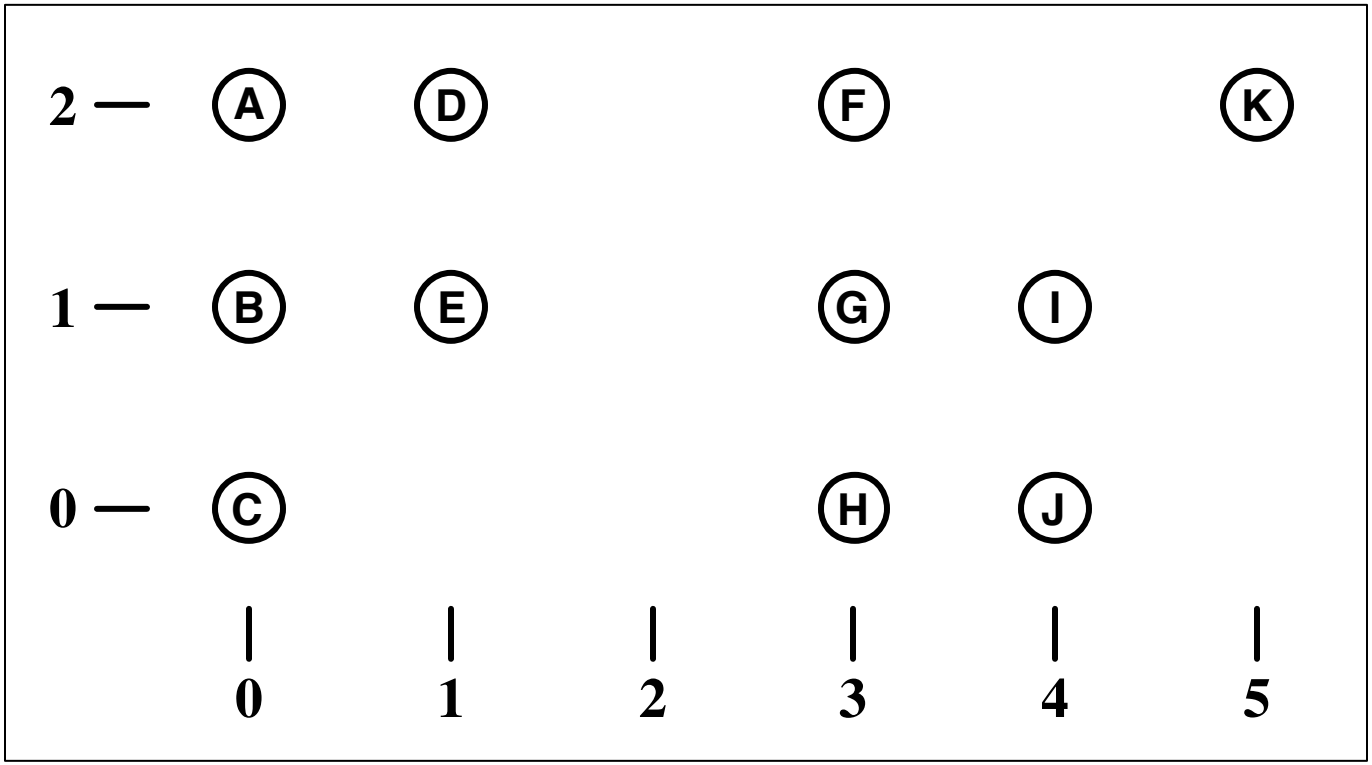

Traveling

Implied Integer Program

```
set CITIES ordered;

param hpos {CITIES} >= 0;
param vpos {CITIES} >= 0

set PAIRS := {i in CITIES, j in CITIES: ord(i) < ord(j)};

param dist {(i,j) in PAIRS}
    := sqrt((hpos[j]-hpos[i])^2 + (vpos[j]-vpos[i])^2);

# ==================================

var Travel {PAIRS} integer >= 0, <= 1;

minimize Tour_Length:
   sum {(i,j) in PAIRS} dist[i,j] * Travel[i,j];

subject to Visit_All {i in CITIES}:
   sum {(i,j) in PAIRS} Travel[i,j] +
   sum {(j,i) in PAIRS} Travel[j,i] = 2;
```

Traveling

Data for the Integer Program

```
param: CITIES: hpos vpos :=
          A      0    2
          B      0    1
          C      0    0
          D      1    2
          E      1    1
          F      3    2
          G      3    1
          H      3    0
          I      4    1
          J      4    0
          K      5    2  ;
```

Traveling

Solution *(as a linear program)*

```
ampl: model travel.mod
ampl: data travel.dat

ampl: solve;

MINOS 5.5: ignoring integrality of 55 variables
MINOS 5.5: optimal solution found.

37 iterations, objective 12.82842712

ampl: option display_1col 1000;
ampl: option omit_zero_rows 1;
ampl: option display_eps .000001;

ampl: display Travel;

Travel :=

A B   1
A D   1
B C   1
C E   1
D E   1
F G   1
F K   1
G H   1
H J   1
I J   1
I K   1 ;
```

Solution *(showing 2 subtours)*

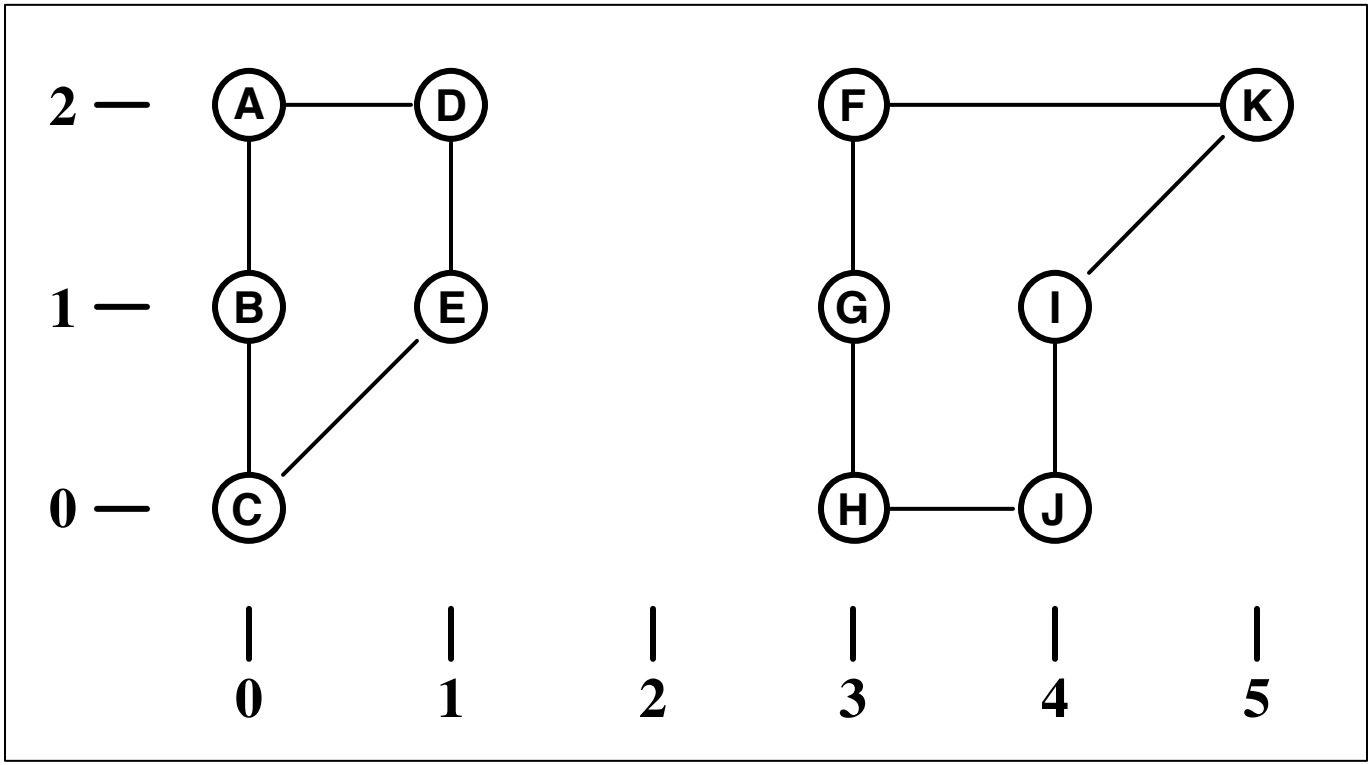

. . . total distance = 12.828

Traveling

Equivalent Integer Program

```
. . . . . . .
param nSub >= 0;
set SUB {1..nSub} within CITIES;

subject to Subtour_Elimination {k in 1..nSub}:
   sum {i in SUB[k], j in CITIES diff SUB[k]} Travel[i,j] +
   sum {i in CITIES diff SUB[k], j in SUB[k]} Travel[i,j] >= 2;
```

and data for one subtour:

```
. . . . . . .
param nSub := 1 ;
set SUB[1] := A B C D E ;
```

Traveling

Solution *(as a linear program)*

```
ampl: reset;

ampl: model travel2.mod
ampl: data travel2.dat

ampl: solve;

MINOS 5.5: ignoring integrality of 55 variables
MINOS 5.5: optimal solution found.

39 iterations, objective 14.82842712

ampl: display Travel;

Travel :=

A B   1
A D   1
B C   1
C E   1
D F   1
E G   1
F K   1
G H   1
H J   1
I J   1
I K   1 ;
```

Networks

Solution *(optimal)*

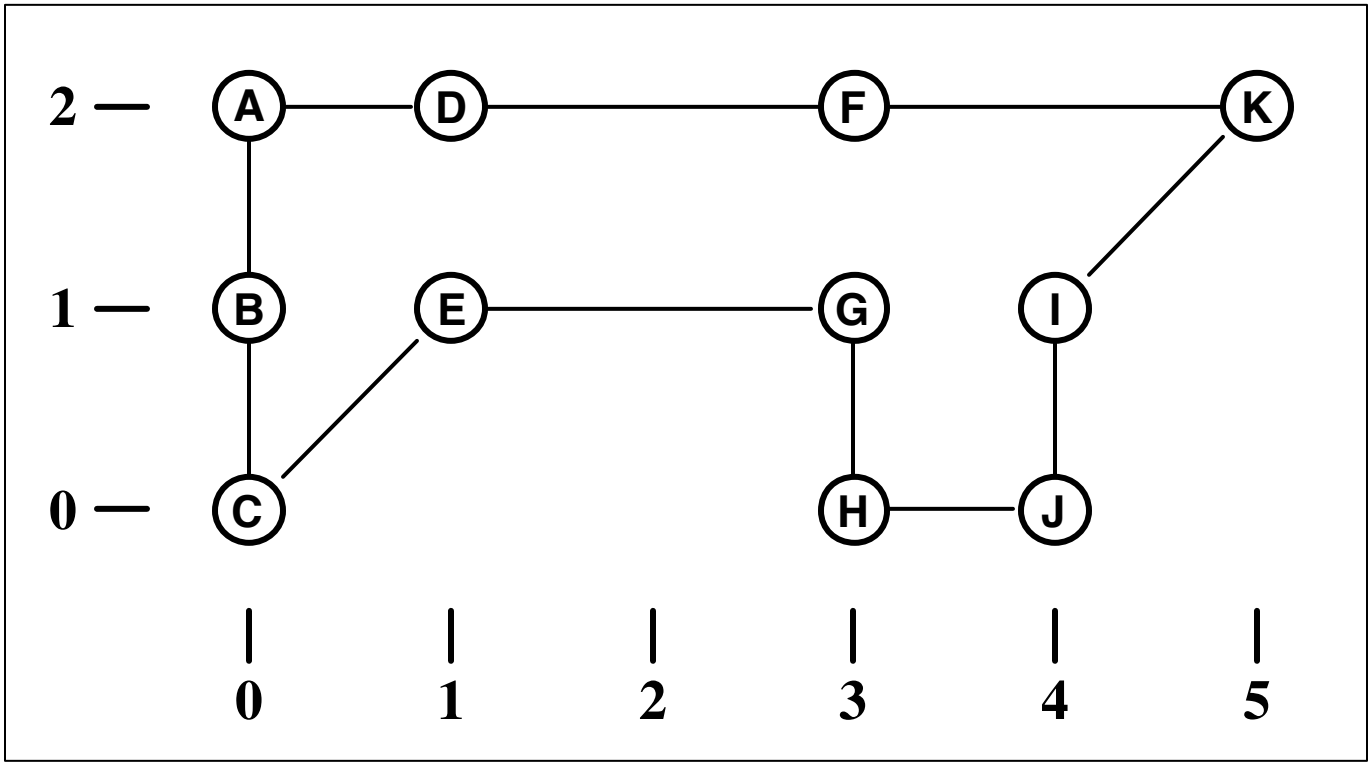

. . . total distance = 14.828

Very Important Modeling Language Features

Recognizing other types of models

Complementarity problems

General combinatorial problems ***(see Thursday's session)***

Semidefinite programs ***(to come)***

Stochastic programs ***(to come, but harder)***

Exchanging information with solvers

Solver-specific directives

Solver-specific results & diagnostic information

Programming iterative schemes

Loops over sets

`if-then-else` tests

Switching between subproblems

Very Important Features *(cont'd)*

Communicating with more solvers

Open solver interfaces ***(as in AMPL)***

Internet solver services

Solver input/output standards ***(to come)***

Communicating with other software

Database access

Callable interfaces to modeling systems ***(see Thursday's session)***

Complementarity Problems

Definition

Collections of complementarity conditions:

- Two inequalities must hold,
  at least one of them with equality

Applications

Equilibrium problems in
economics and engineering

Optimality conditions for nonlinear programs,
bi-level linear programs, bimatrix games, . . .

Classical Linear Complementarity

Economic equilibrium

```
set PROD;   # products
set ACT;    # activities

param cost {ACT} > 0;       # cost per unit of each activity
param demand {PROD} >= 0;   # units of demand for each product

param io {PROD,ACT} >= 0;   # units of each product from
                            # 1 unit of each activity

var Price {i in PROD};
var Level {j in ACT};

subject to Pri_Compl {i in PROD}:
   Price[i] >= 0 complements
      sum {j in ACT} io[i,j] * Level[j] >= demand[i];

subject to Lev_Compl {j in ACT}:
   Level[j] >= 0 complements
      sum {i in PROD} Price[i] * io[i,j] <= cost[j];
```

. . . complementary slackness conditions
for an equivalent linear program

Mixed Linear Complementarity

Economic equilibrium with bounded variables

```
set PROD;   # products
set ACT;    # activities

param cost {ACT} > 0;        # cost per unit
param demand {PROD} >= 0;    # units of demand

param io {PROD,ACT} >= 0;    # units of product per unit of activity

param level_min {ACT} > 0;   # min allowed level for each activity
param level_max {ACT} > 0;   # max allowed level for each activity

var Price {i in PROD};
var Level {j in ACT};

subject to Pri_Compl {i in PROD}:
   Price[i] >= 0 complements
      sum {j in ACT} io[i,j] * Level[j] >= demand[i];

subject to Lev_Compl {j in ACT}:
   level_min[j] <= Level[j] <= level_max[j] complements
      cost[j] - sum {i in PROD} Price[i] * io[i,j];
```

. . . complementarity conditions
for optimality of an equivalent bounded linear program

Mixed Nonlinear Complementarity

Economic equilibrium with price-dependent demands

```
set PROD;   # products
set ACT;    # activities

param cost {ACT} > 0;        # cost per unit
param demand {PROD} >= 0;    # units of demand

param io {PROD,ACT} >= 0;    # units of product per unit of activity

param demzero {PROD} > 0;    # intercept and slope of the demand
param demrate {PROD} >= 0;   # as a function of price

var Price {i in PROD};
var Level {j in ACT};

subject to Pri_Compl {i in PROD}:
   Price[i] >= 0  complements
      sum {j in ACT} io[i,j] * Level[j]
         >= demzero[i] + demrate[i] * Price[i];

subject to Lev_Compl {j in ACT}:
   Level[j] >= 0 complements
      sum {i in PROD} Price[i] * io[i,j] <= cost[j];
```

. . . not equivalent to a linear program

Operands to `complements`: always 2 inequalities

Two single inequalities

single-ineq1 **`complements`** *single-ineq2*

Both inequalities must hold, at least one at equality

One double inequality

double-ineq **`complements`** *expr*
expr **`complements`** *double-ineq*

The double-inequality must hold, and

if at lower limit then *expr* = 0,
if at upper limit then *expr* = 0,
if between limits then *expr* = 0

One equality

equality **`complements`** *expr*
expr **`complements`** *equality*

The equality must hold ***(included for completeness)***

Complementarity

Solvers

"Square" systems

of variables =
    # of complementarity constraints +
    # of equality constraints

Transformation to a simpler canonical form required

MPECs

Mathematical programs with equilibrium constraints

No restriction on numbers of variables & constraints

Objective functions permitted

. . . solvers just now beginning to emerge

Features

Iterative Schemes

Flow of control

Looping

If-then-else

Named subproblems

Defining subproblems

Switching subproblems

Debugging

Expanding constraints

Single-stepping

Iterative Schemes

Flow of Control

```
model diet.mod;
data diet2a.dat;

set NALOG default {};

param NAobj {NALOG};
param NAdual {NALOG};

for {theta in 52000 .. 70000 by 1000} {
   let n_max["NA"] := theta;

   solve;

   let NALOG := NALOG union {theta};
   let NAobj[theta] := total_cost;
   let NAdual[theta] := diet["NA"].dual;

   if diet["NA"].dual > -.000001 then break;
   }
```

Flow of Control: *Sample Output*

```
ampl: commands diet.run;
ampl: display NAobj, NAdual;
:        NAobj       NAdual   :=
52000   113.428   -0.0021977
53000   111.23    -0.0021977
54000   109.42    -0.00178981
55000   107.63    -0.00178981
56000   105.84    -0.00178981
57000   104.05    -0.00178981
58000   102.26    -0.00178981
59000   101.082   -0.000155229
60000   101.013    0          ;
```

Named Subproblems

Cutting-stock optimization with given patterns

```
param roll_width > 0;

set WIDTHS;
param orders {WIDTHS} > 0;

param nPAT integer >= 0;
set PATTERNS := 1..nPAT;

param nbr {WIDTHS,PATTERNS} integer >= 0;

var Cut {PATTERNS} integer >= 0;

minimize Number: sum {j in PATTERNS} Cut[j];

subj to Fill {i in WIDTHS}:
   sum {j in PATTERNS} nbr[i,j] * Cut[j] >= orders[i];
```

New pattern generation

```
param price {WIDTHS};

var Use {WIDTHS} integer >= 0;

minimize Reduced_Cost:
   1 - sum {i in WIDTHS} price[i] * Use[i];

subj to Width_Limit:
   sum {i in WIDTHS} i * Use[i] <= roll_width;
```

Iterative Schemes

Defining Subproblems

AMPL "script" to set up for
Gilmore-Gomory column generation method

```
### DEFINE CUTTING PROBLEM
problem Cutting_Opt: Cut, Number, Fill;
option relax_integrality 1;

### DEFINE PATTERN-GENERATING PROBLEM
problem Pattern_Gen: Use, Reduced_Cost, Width_Limit;
option relax_integrality 0;

### SET UP INITIAL CUTTING PATTERNS
for {i in WIDTHS} {
   let nPAT := nPAT + 1;
   let nbr[i,nPAT] := floor (roll_width/i);
   let {i2 in WIDTHS: i2 <> i} nbr[i2,nPAT] := 0;
   };
```

. . . each problem has its own option environment

Iterative Schemes

Switching Subproblems

AMPL "script" for main loop of Gilmore-Gomory column generation

```
repeat {
   solve Cutting_Opt;
   display Cut;
   let {i in WIDTHS} price[i] := Fill[i].dual;
   solve Pattern_Gen;
   display price,Use;
   if Reduced_Cost >= -0.00001 then break;
   else {
      let nPAT := nPAT + 1;
      let {i in WIDTHS} nbr[i,nPAT] := Use[i];
      };
   };
option Cutting_Opt.relax_integrality 0;
solve Cutting_Opt;
```

Iterative Schemes

Debugging

Single-stepping through the cutting-stock script

```
ampl: model cut.mod; data cut.dat;

ampl: option single_step 1;

ampl: commands cut.run;
cut.run:10(172)   for ...

<2>ampl: next
cut.run:16(318)   option ...

<2>ampl: display nbr;

nbr [*,*]
:    1   2   3   4   5 :=
20   5   0   0   0   0
45   0   2   0   0   0
50   0   0   2   0   0
55   0   0   0   2   0
75   0   0   0   0   1 ;

<2>ampl: step
cut.run:19(365)   repeat ...

<2>ampl: step
cut.run:23(454)   solve ...
```

Iterative Schemes

Debugging *(cont'd)*

Expanding the cutting-stock constraints

```
ampl: display nbr;
:    1   2   3   4   5   6   7   8 :=
20   5   0   0   0   0   1   1   3
45   0   2   0   0   0   2   0   0
50   0   0   2   0   0   0   0   1
55   0   0   0   2   0   0   0   0
75   0   0   0   0   1   0   1   0 ;

ampl: expand Fill;
s.t. Fill[20]:
        5*Cut[1] + Cut[6] + Cut[7] + 3*Cut[8] >= 48;
s.t. Fill[45]:
        2*Cut[2] + 2*Cut[6] >= 35;
s.t. Fill[50]:
        2*Cut[3] + Cut[8] >= 24;
s.t. Fill[55]:
        2*Cut[4] >= 10;
s.t. Fill[75]:
        Cut[5] + Cut[7] >= 8;
```

. . . can also view after reduction by "presolve" routines

Features

Internet Solver Services

Optimization Modeling-Language Servers

Single-langauge servers

General server projects related to optimization

NEOS Server

Client-Server Alternatives

General-purpose clients

Clients specially for NEOS

Callable NEOS

Kestrel / AMPL, Kestrel / GAMS

GAMS / AMPL via Kestrel

Metacomputing clients

MW, iMW

Condor / AMPL, Condor / GAMS

Kestrel / AMPL, Kestrel / GAMS

Internet

The NEOS Server

`www-neos.mcs.anl.gov/neos/`

Over three dozen solvers, for

- Linear programming
- Linear network optimization
- Linear integer programming
- Nonlinear programming
- Nonlinear integer programming
- Nondifferentiable & global optimization
- Stochastic linear programming
- Complementarity problems
- Semidefinite programming

Internet

NEOS Server Design

Flexible architecture

Central controller and scheduler machine

Distributed solver sites

Numerous formats

Low-level formats: MPS, SIF, SDPA

Programming languages: C/ADOL-C, Fortran/ADIFOR

High-level modeing languages: AMPL, GAMS, MP-MODEL

Varied submission options

E-mail

Web forms

TCP/IP socket-based submission tool: Java or tcl/tk

. . . handled 2785 submissions last week (16 Sept 2002)

. . . can accept submissions of new solvers, too

Internet

NEOS Solver Listing

NEOS Solvers - Netscape

File Edit View Go Communicator Help

NEOS Solvers

Choose a solver for the type of optimization problem that you want to solve. If you are not sure of the type of optimization problem, consult the Optimization Tree of the NEOS Guide for information on optimization problems. The choice of solver is then dictated by the language used to define the optimization problem. You can also choose your solver by input format.

Each solver has sample problems and background information on the solver. Be sure to submit a sample problem to get a feel for how to submit optimization problems to NEOS. If you encounter problems, consult the NEOS Server FAQ, or send mail to us by clicking on the **Comments and Questions** icon at the bottom of the page.

- **Mixed Integer Nonlinearly Constrained Optimization**

  MINLP (AMPL input)
  SBB (GAMS input)

- **Mixed Integer Linear Programming**

  BonsaiG (AMPL input)
  BonsaiG (MPS, LP)
  FORTMP (AMPL, MPS)
  GLPK (AMPL input)
  GLPK (MPS, LP)
  XPRESS (AMPL input)
  XPRESS (GAMS Input)
  XPRESS-MP (mp-model input)
  XPRESS-MP/INTEGER

- **Nonlinearly Constrained Optimization**

  CONOPT (GAMS input)
  DONLP2 (AMPL input)
  FILTER (AMPL input)
  KNITRO (AMPL input)
  LANCELOT (AMPL input)
  LANCELOT
  LOQO (AMPL input)

Document: Done

Internet

Callable NEOS

General mechanism

CORBA-based connection
between local program and NEOS Server

API under development
to support varied specialized applications

Kestrel: An application to AMPL (also GAMS)

`www-neos.mcs.anl.gov/neos/kestrel.html`
`www.ampl.com/ampl/REMOTE/`
`www.gams.com/contrib/kestrel.htm`

Installs as a new "solver" that provides a NEOS gateway

Combines convenient local modeling environment
with access to remote solvers

Internet

Kestrel Example

sw: running ampl

File Edit Help

```
sw: ampl -v
AMPL Version 20000516 (MS VC++ 6.0)

ampl: model gs2000b.mod;
ampl: data gs2000b.dat;

ampl: option solver kestrel;
ampl: option kestrel_options 'solver=loqo';
ampl: option loqo_options 'minlocfil outlev=1';

ampl: option show_stats 1;
ampl: solve;

Presolve eliminates 100 constraints.
Adjusted problem:
4290 variables:
        4260 binary variables
        30 linear variables
733 constraints, all linear; 36340 nonzeros
1 linear objective; 30 nonzeros.

Job has been submitted to Kestrel
Kestrel/NEOS Job number     : 115406
Kestrel/NEOS Job password   : GKkIXgUu

Check the following URL for progress report :
     http://www-neos.mcs.anl.gov/neos/neos-cgi/check-status.cgi?job=115406&pass=GKkIXgUu

In case of problems, e-mail :
     neos-comments@mcs.anl.gov
```

Internet

Kestrel Example *(cont'd)*

sw: running ampl

File Edit Help

```
Check the following URL for progress report :
     http://www-neos.mcs.anl.gov/neos/neos-cgi/check-status.cgi?job=115406&pass=GKkIXgUu

In case of problems, e-mail :
     neos-comments@mcs.anl.gov

Intermediate Solver Output:
Checking the AMPL files
Executing algorithm...

LOQO 6.00: minlocfil
outlev=1

It's a QP.
ignoring integrality of 4260 variables

  1    0.000000e+00   2.1e+02    -4.263593e+05   1.7e+03
  2    2.839512e+03   1.1e+01    -4.206438e+05   8.8e+01
  3    2.803962e+03   5.8e-01    -3.084425e+05   3.7e+00
  4    1.804909e+03   7.0e-02    -2.965997e+04   1.4e-13           DF
  5    3.154594e+02   1.1e-02    -3.913235e+03   1.7e-13           DF
  6    3.771029e+01   1.2e-03    -2.201994e+02   4.6e-14           DF
  7    2.235023e+01   6.4e-04    -1.072541e+01   3.6e-14           DF
  8    1.700808e+01   3.1e-04     2.429905e+00   2.9e-14           DF
  9    1.536949e+01   1.4e-04     9.410120e+00   4.6e-14           DF
 10    1.446494e+01   4.4e-05     1.271394e+01   3.8e-14    1      DF
 11    1.405838e+01   2.4e-06     1.326864e+01   3.0e-14    1      DF
 12    1.400320e+01   1.4e-07     1.396308e+01   3.5e-14    3   PF DF
 13    1.400016e+01   7.3e-09     1.399815e+01   3.9e-14    4   PF DF
 14    1.400001e+01   3.6e-10     1.399991e+01   3.5e-14    5   PF DF
 15    1.400000e+01   1.8e-11     1.400000e+01   4.1e-14    6   PF DF
 16    1.400000e+01   9.1e-13     1.400000e+01   3.5e-14    8   PF DF
Finished call

LOQO 6.00: optimal solution (16 QP iterations, 31 evaluations)
primal objective 14.00000002
  dual objective 13.99999977

ampl: display MinNotDom, MaxNotDom;

:                 MinNotDom MaxNotDom    :=
Office Americas       3         4
;

ampl:
```

Internet

Outline of Kestrel Operations

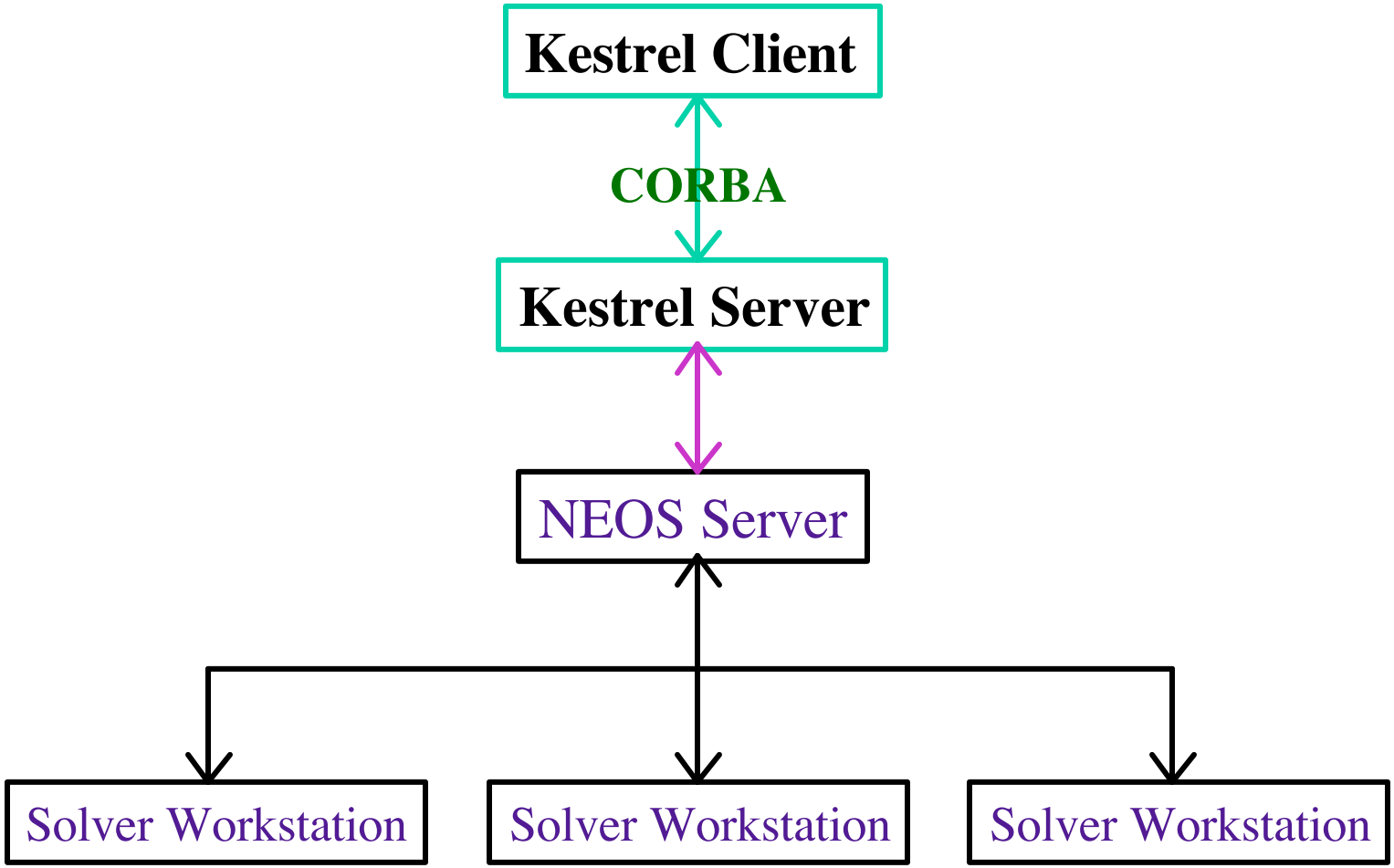

Internet

Other Kestrel Enhancements

Connections to results

Web connection to intermediate results

Kestrel client access to recent results
after connection to Kestrel server has been broken

. . . job number and password required

Flexibility

NEOS Server now accepts binary data
from any input source

Jobs on many solver workstations
may be killed by user

Internet

Kestrel "Parallel" Processing

Invoke Kestrel within a loop

`kestrelsub` submits multiple solve requests

NEOS Server distributes requests to multiple workstations (queueing some if necessary)

`kestrelret` retrieves requests in the order they were sent

Example from a decomposition script

```
for {p in PROD} {
   problem SubI[p];
   commands kestrelsub;
};

for {p in PROD} {
   problem SubI[p];
   commands kestrelret;
   display Artif_Reduced_Cost[p];
   ...
};
```

Features

Database Access

Principles

Model stays strictly independent of data

New `table` statement links model to relational tables

New `read table`, `write table` statements control data transfer

Open interface supports adding new links

Extensions

Reading and writing the same table

Indexed collections of tables or columns

Reading from SQL queries

Database

Example: Diet Model

```
set NUTR;
set FOOD;

param cost {FOOD} > 0;
param f_min {FOOD} >= 0;
param f_max {j in FOOD} >= f_min[j];

param n_min {NUTR} >= 0;
param n_max {i in NUTR} >= n_min[i];

param amt {NUTR,FOOD} >= 0;

var Buy {j in FOOD} >= f_min[j], <= f_max[j];

minimize Total_Cost:
   sum {j in FOOD} cost[j] * Buy[j];

subject to Diet {i in NUTR}:
   n_min[i] <= sum {j in FOOD} amt[i,j] * Buy[j] <= n_max[i];
```

Database

Example: Diet Data *(in MS Access)*

Microsoft Access

File Edit View Insert Format Records Tools Window Help

dietIN : Database

Tables | Queries | Forms | Reports | Macros | Modu

- Amounts
- Foods
- Nutrs

Foods : Table

foods	cost	f_min	f_max
BEEF	3.19	2	10
CHK	2.59	2	10
FISH	2.29	2	10
HAM	2.89	2	10
MCH	1.89	2	10
MTL	1.99	2	10
SPG	1.99	2	10
TUR	2.49	2	10

Record: 7 of 8

Nutrs : Table

nutrients	n_min	n_max
A	700	20000
B1	700	20000
B2	700	20000
C	700	20000
CAL	16000	24000
NA	0	50000

Record: 6 of 6

Amounts : Table

foods	nutrs	amt
BEEF	A	60
BEEF	B1	10
BEEF	B2	15
BEEF	C	20
BEEF	NA	938
BEEF	CAL	295
CHK	A	8
CHK	B1	20
CHK	B2	20
CHK	C	0
CHK	NA	2180
CHK	CAL	770
FISH	A	8
FISH	B1	15
FISH	B2	10
FISH	C	10
FISH	NA	945
FISH	CAL	440
HAM	A	40
HAM	B1	35
HAM	B2	10
HAM	C	40
HAM	NA	278
HAM	CAL	430
MCH	A	15
MCH	B1	15
MCH	B2	15
MCH	C	35
MCH	NA	1182
MCH	CAL	315
MTL	A	70

Record: 19 of 48

Datasheet View

Database

Example: Diet Script *(in AMPL)*

```
model diet.mod;

table dietFoods IN "ODBC" "diet.mdb" "Foods":
   FOOD <- [foods], cost, f_min, f_max;
table dietNutrs IN "ODBC" "diet.mdb" "Nutrs":
   NUTR <- [nutrients], n_min, n_max;
table dietAmts IN "ODBC" "diet.mdb" "Amounts":
   [nutrs, foods], amt;

read table dietFoods;
read table dietNutrs;
read table dietAmts;
solve;

table dietResults OUT "ODBC" "diet.mdb" "Scen3": [foodlist],
   Buy, Buy.rc ~ BuyRC, {j in FOOD} Buy[j]/f_max[j] ~ BuyFrac;

write table dietResults;
```

Database

Example: Diet Results *(in MS Access)*

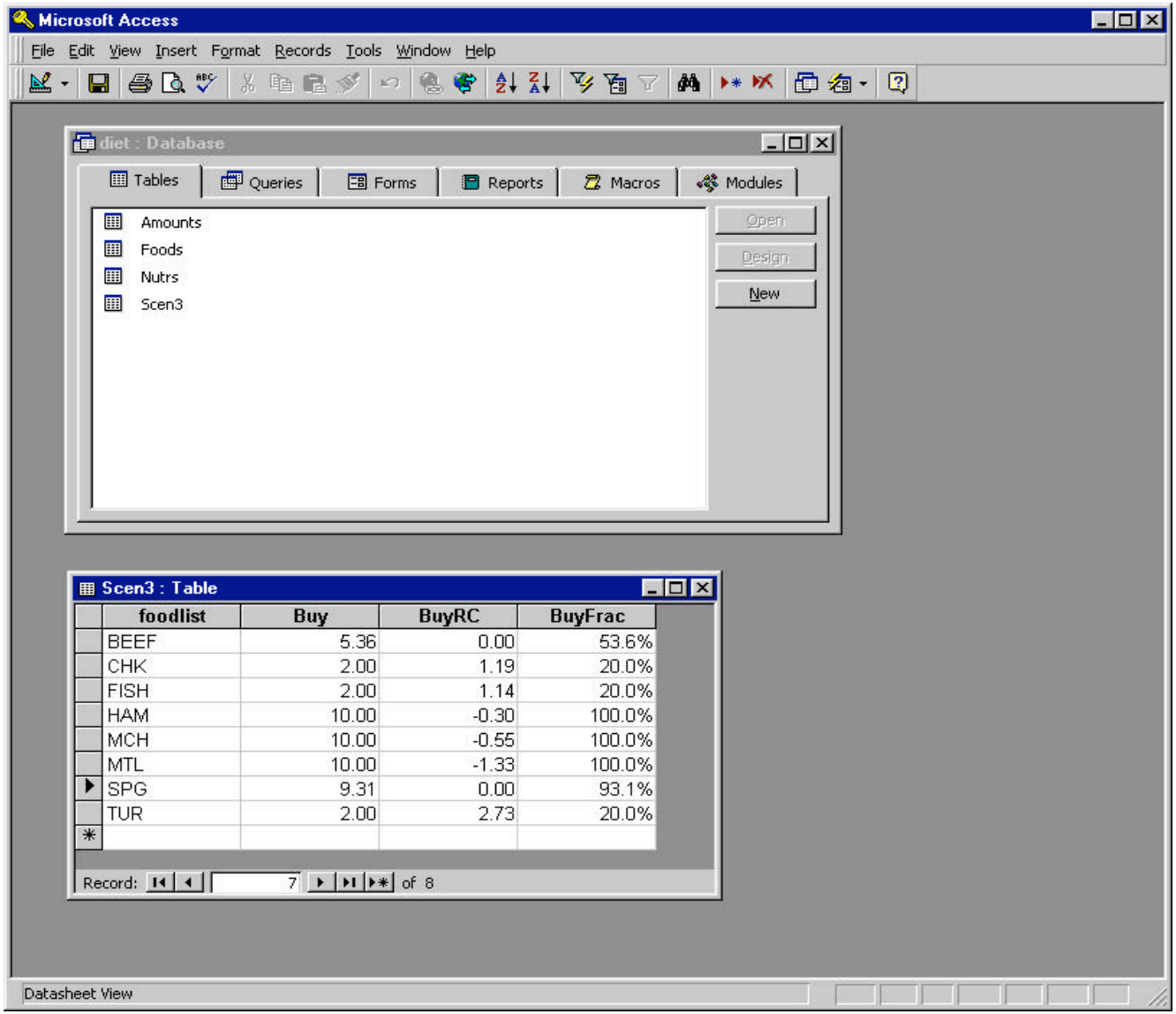

foodlist	Buy	BuyRC	BuyFrac
BEEF	5.36	0.00	53.6%
CHK	2.00	1.19	20.0%
FISH	2.00	1.14	20.0%
HAM	10.00	-0.30	100.0%
MCH	10.00	-0.55	100.0%
MTL	10.00	-1.33	100.0%
SPG	9.31	0.00	93.1%
TUR	2.00	2.73	20.0%